IntelとAMDのDDR3ソリューションの類似性

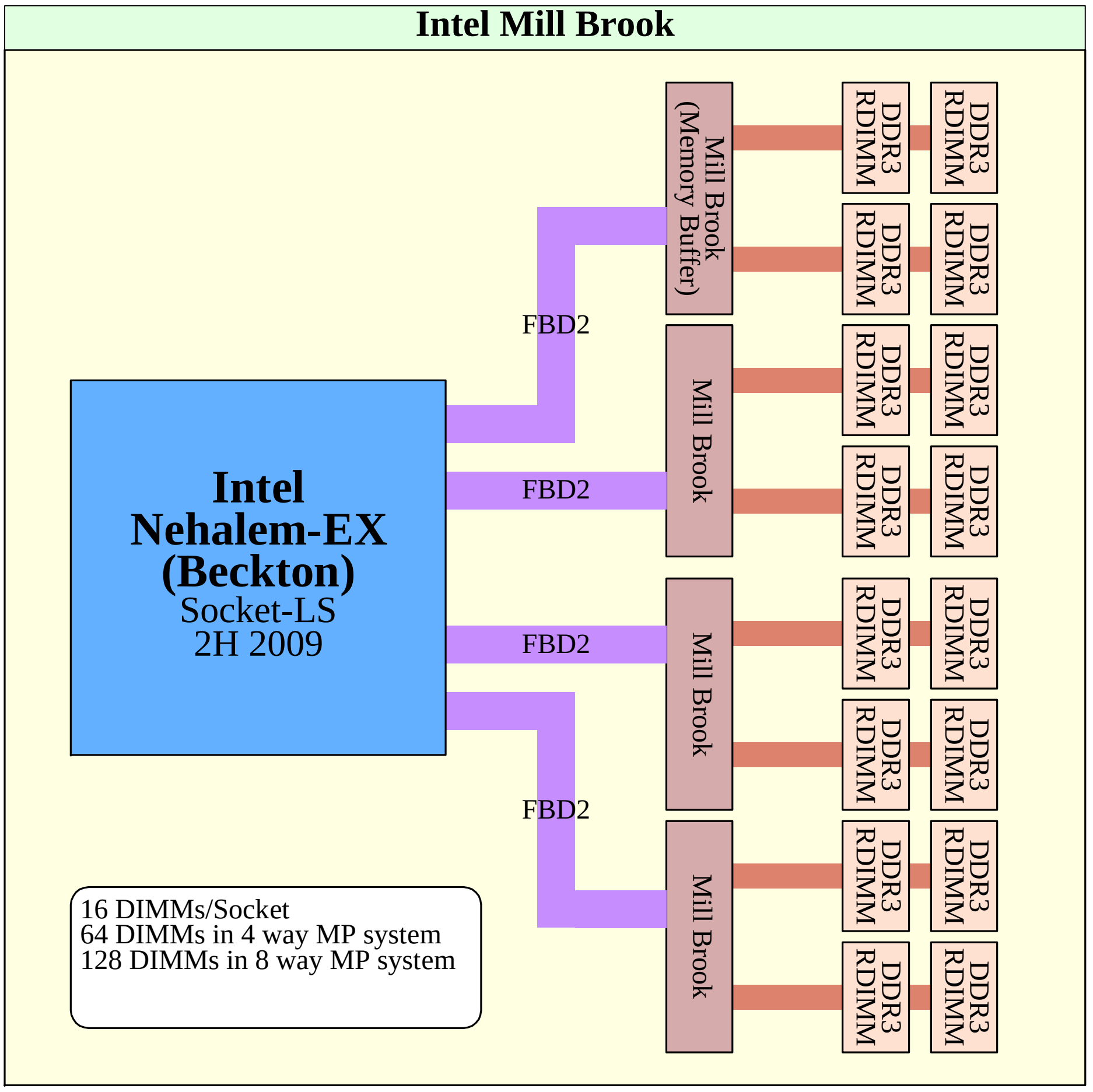

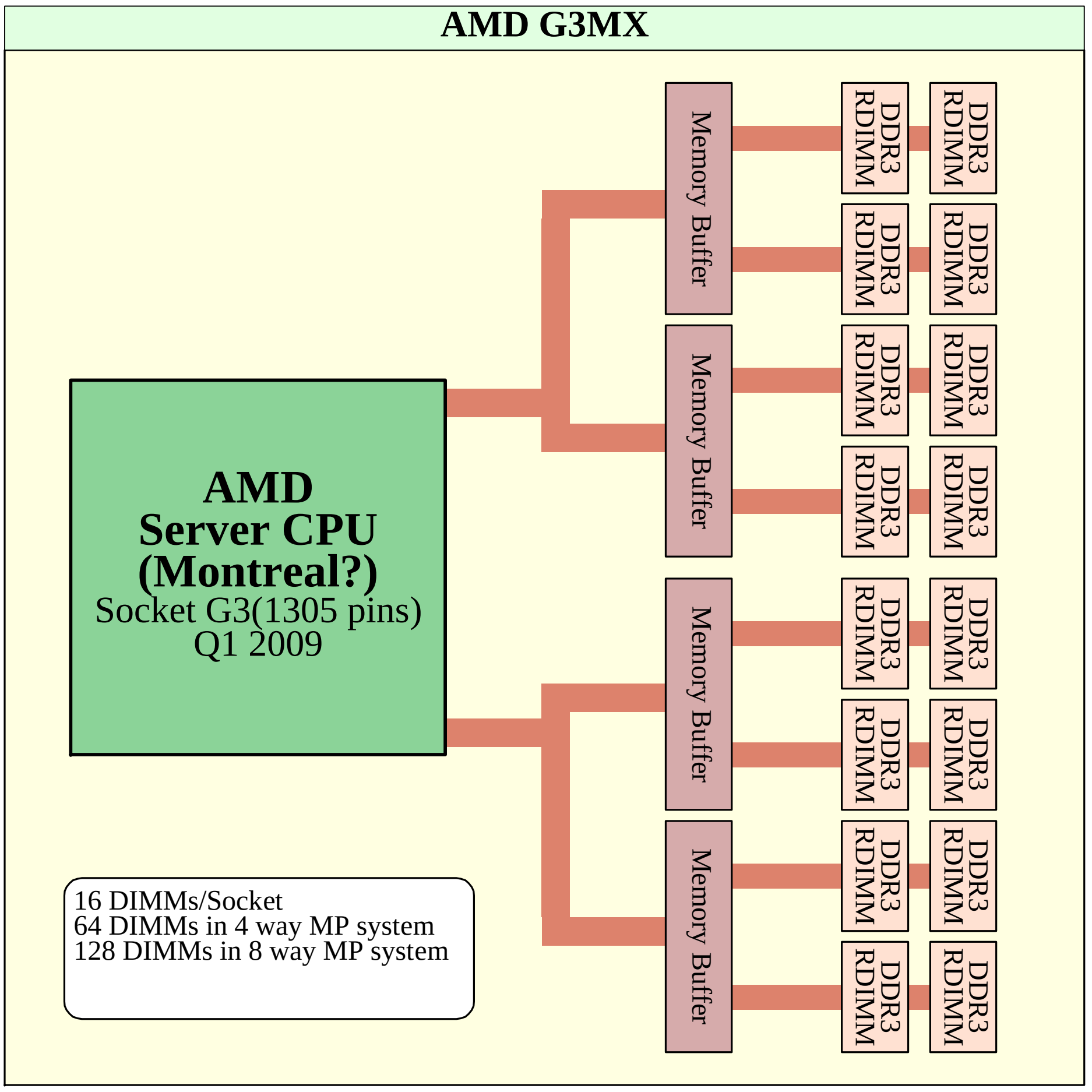

Copyright (c) 2007 Hiroshige Goto All rights reserved.