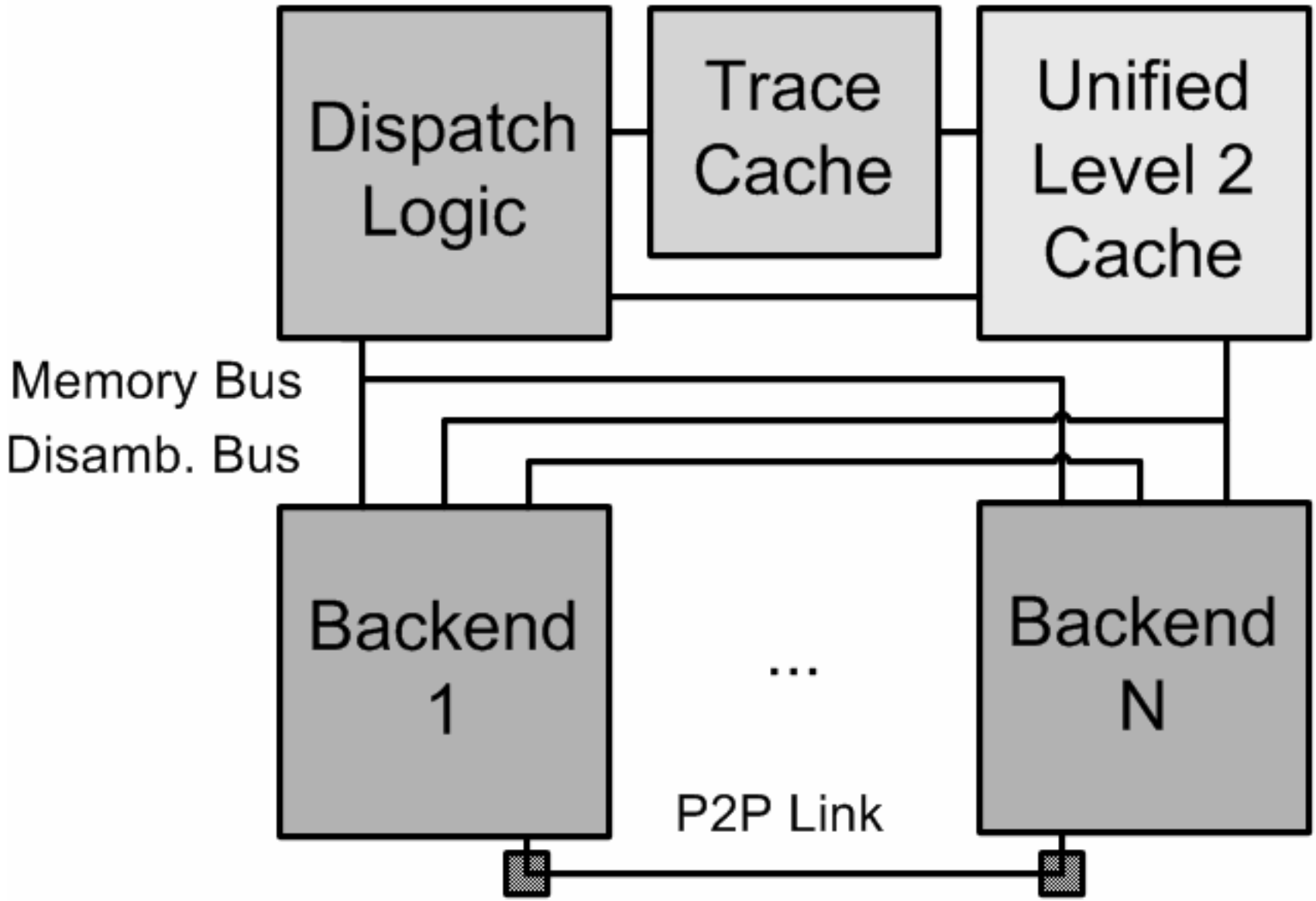
Dispatch Logic
Trace Cache
Unified Level 2 Cache
Memory Bus
Disamb. Bus
Backend 1
...
Backend N
P2P Link