CISC対RISCの利点と難点

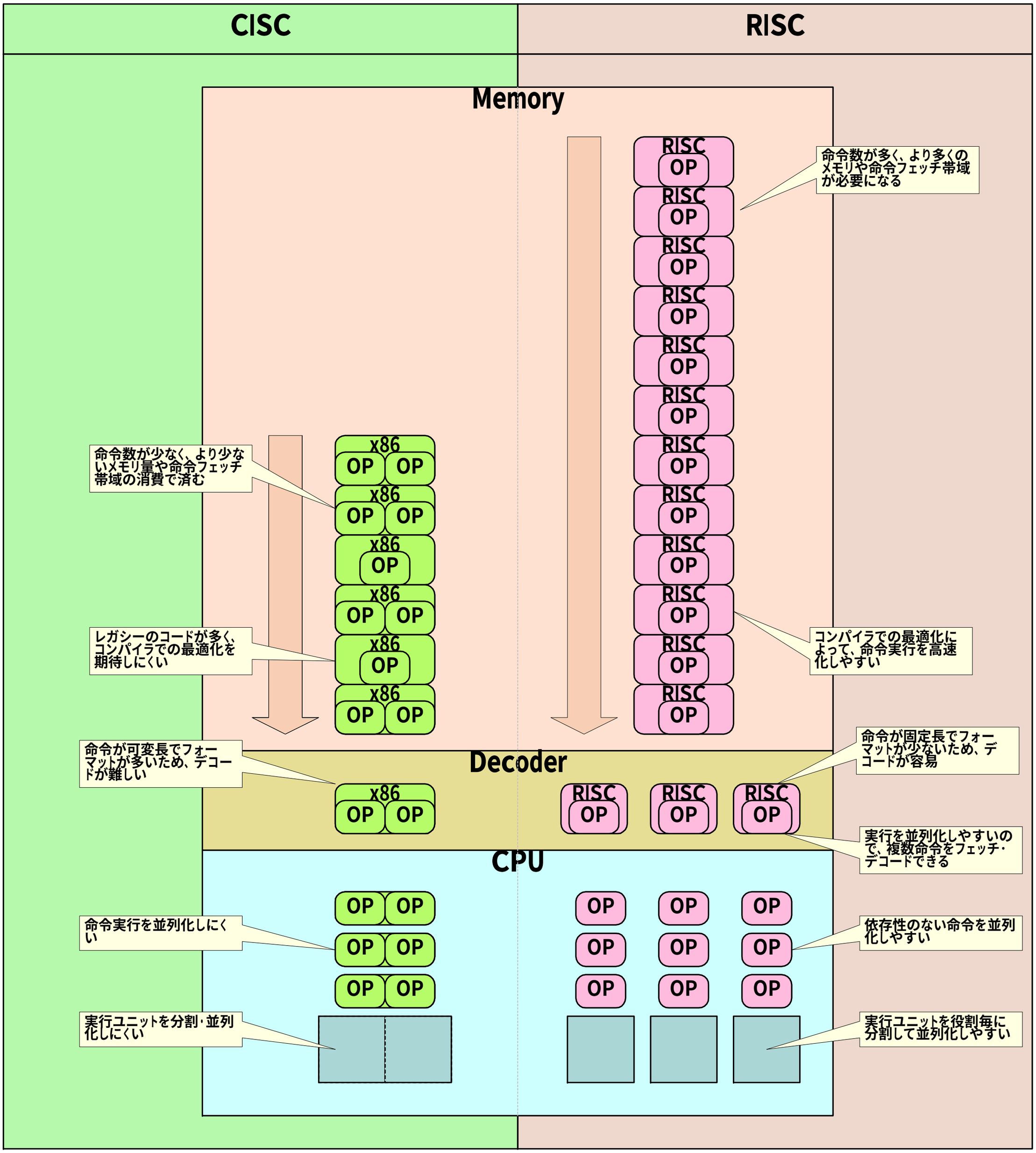

Copyright (c) 2006 Hiroshige Goto All rights reserved.