Broadwater Block Diagram

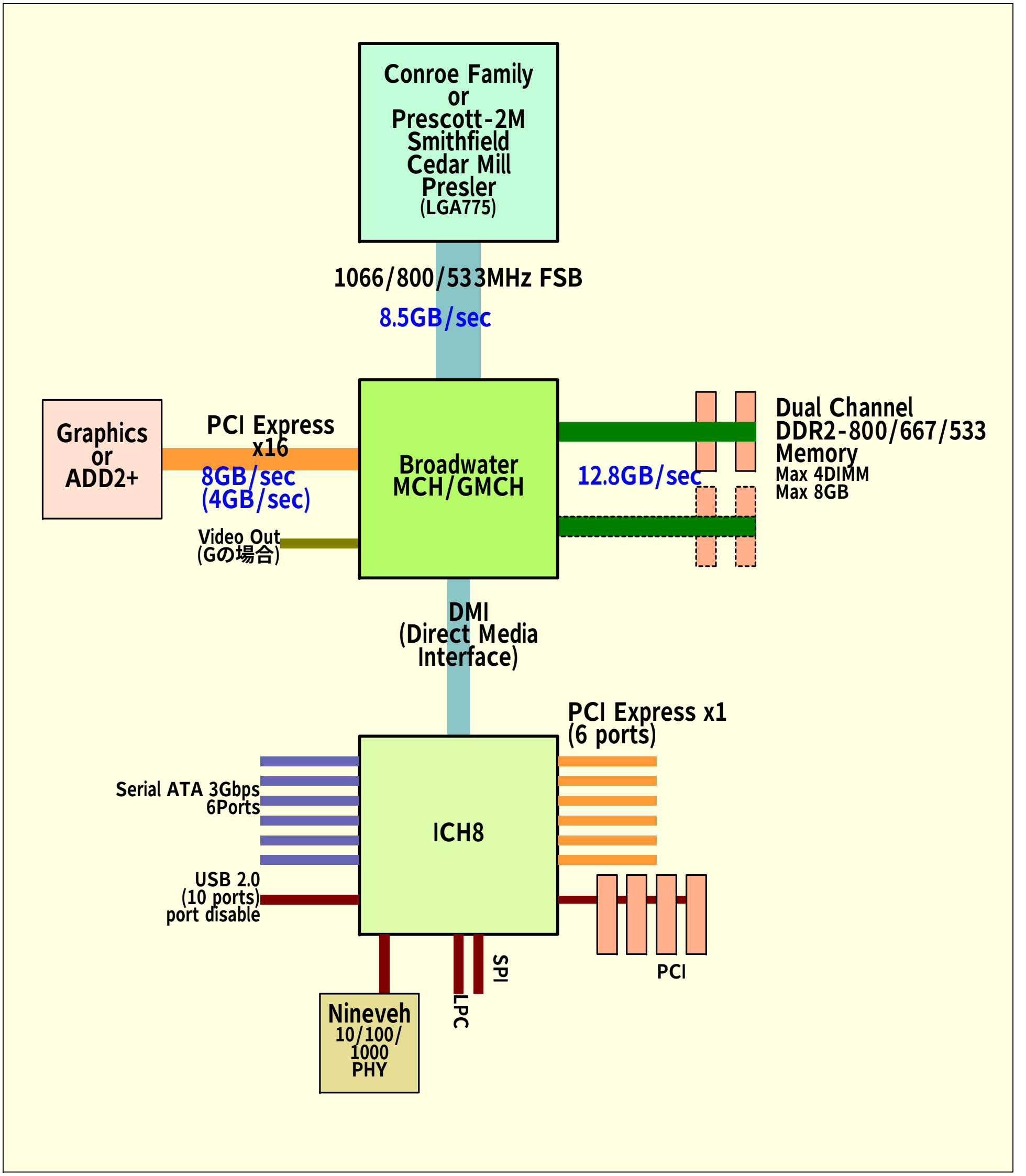

Copyright (c) 2006 Hiroshige Goto All rights reserved.