Xbox360(Xenon) System (一部推定)

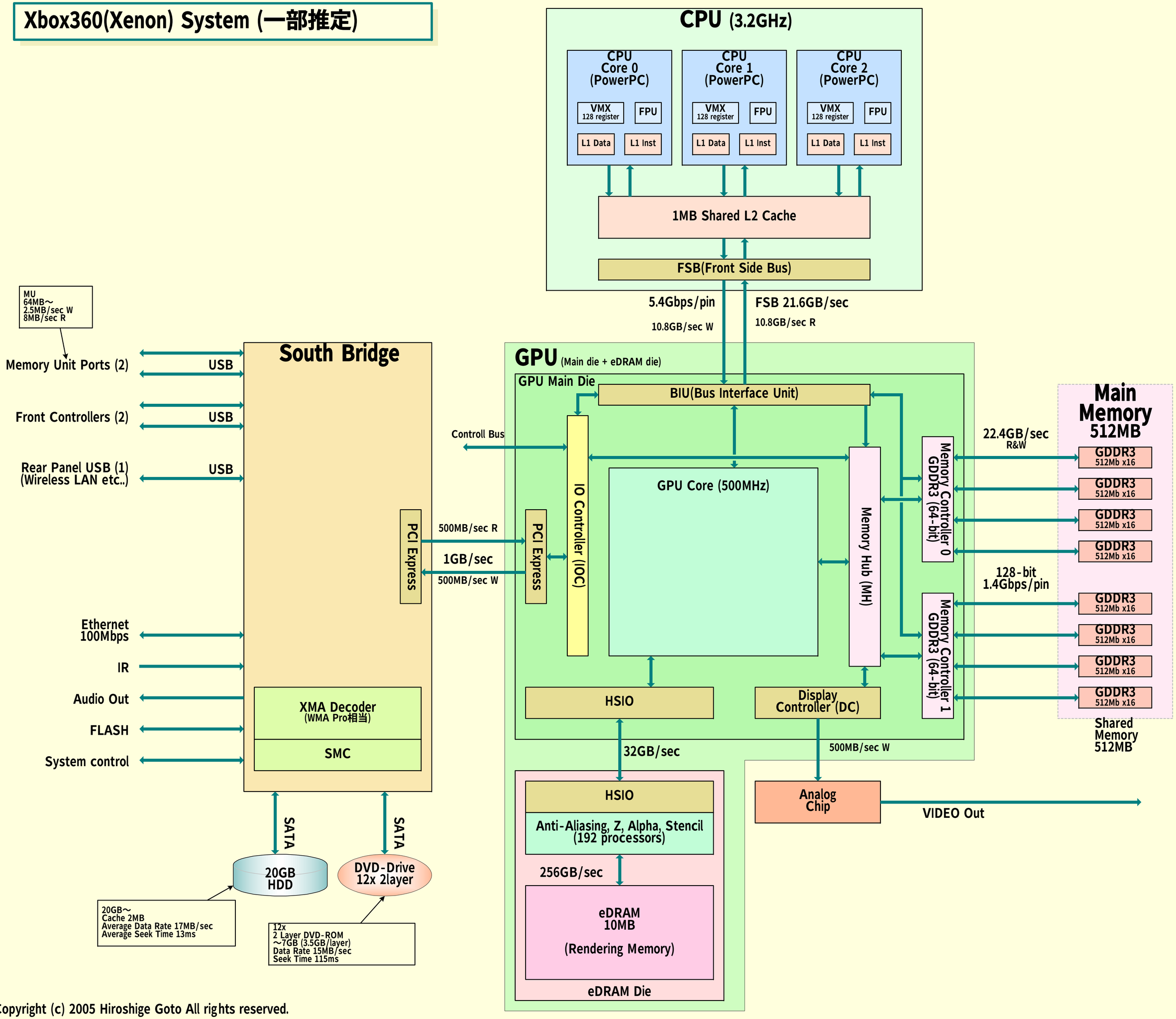

Copyright (c) 2005 Hiroshige Goto All rights reserved.